GAST MANUFACTURING, INC.
A Unit of IDEX Corporation
Post Office Box 97
Benton Harbor, Michigan
Ph: 269/926-6171
Fax: 269/925-8288

PART NUMBER: STD456

REV.: A

NOTES:
1. TECHNICAL DATA SUBJECT TO CHANGE WITHOUT NOTICE.
2. CONFORMS TO EUROPEAN STANDARD EN13463-1 NON-ELECTRICAL EQUIPMENT FOR EXPLOSIVE ATMOSPHERES GROUP 11 CAT 2 (GAS & DUST), PROTECTED BY CONSTRUCTION (SURFACE TEMP. RATED 135C).

SOUND LEVEL	84 dB(A) MAX.
NORMAL AMBIENT	+1 degC - +120 degC
RELATIVE HUMIDITY	0% - 100%
ENVIRONMENT	HAZARDOUS AMBIENT COMBUSTIBLE GAS AND DUST +1°C TO +40°C

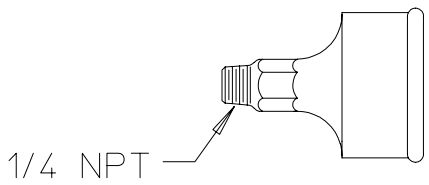

MUFFLER ASSEMBLY

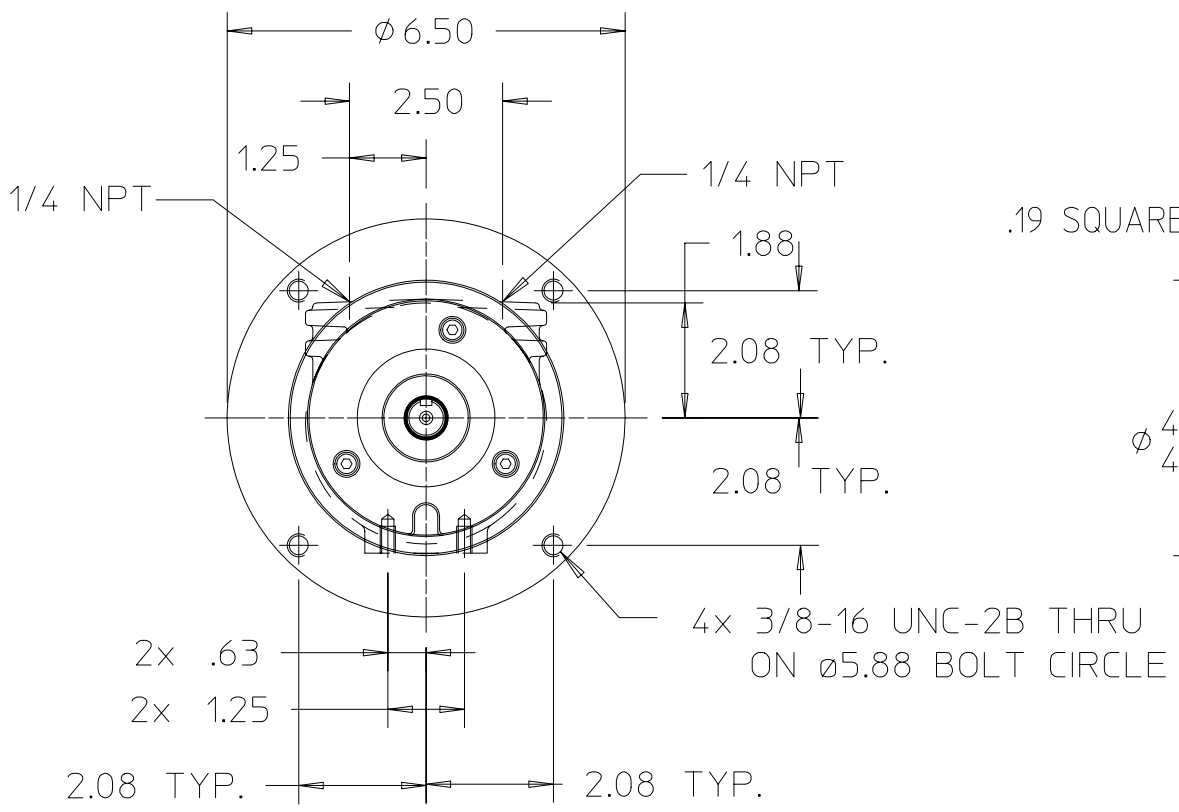

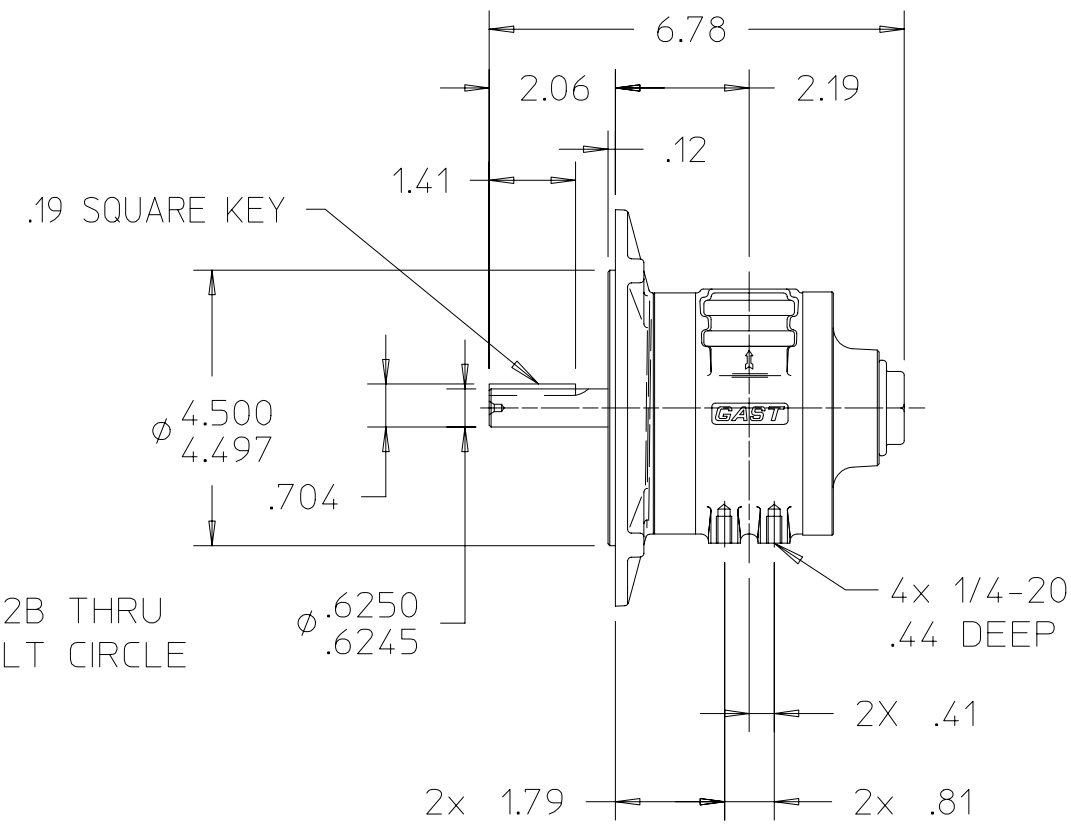

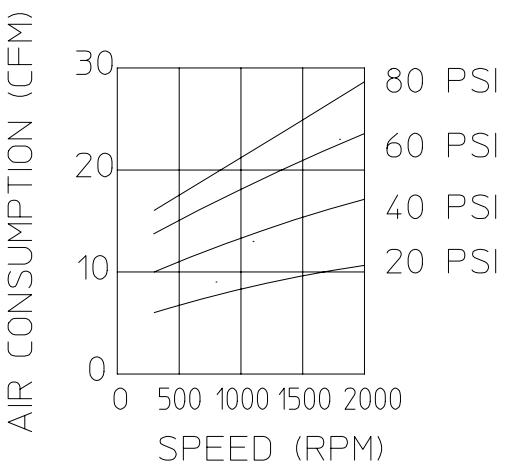

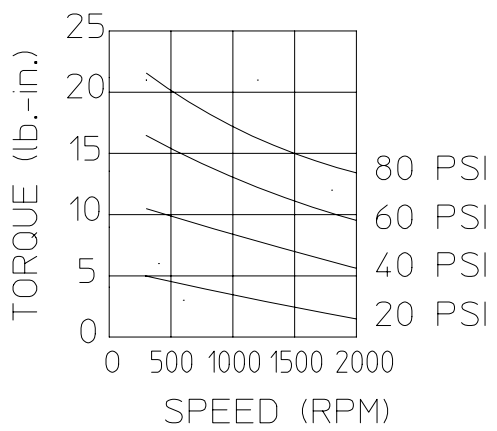

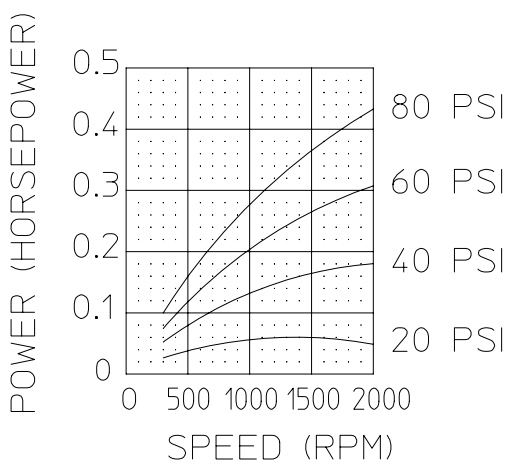

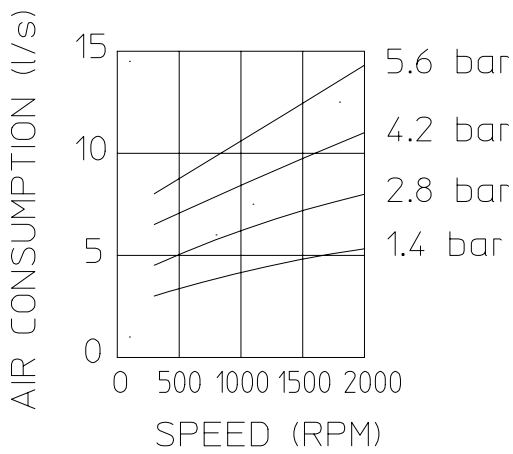

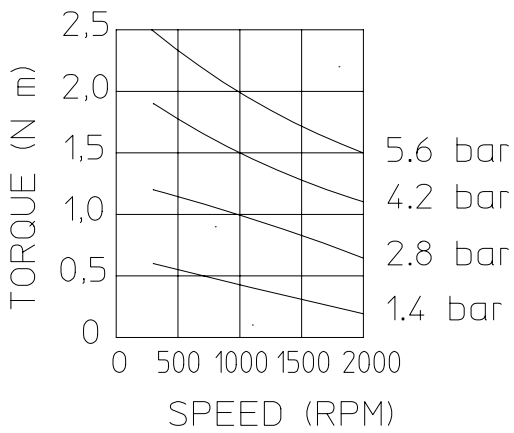

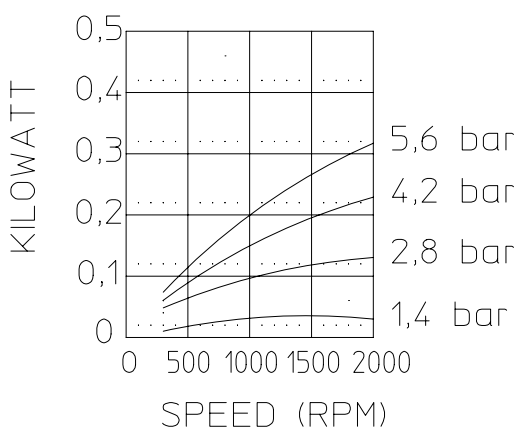

Product Specifications

Model Number	MAX. PRESS. bar.	MAX. PRESS. PSI	MAX. SPEED	HP	kW	Net Wt. lbs.	Net Wt. kg
NL32-NCC-5	5.6	80	2,000	.42	0.31	9.0	4.1