Post Office Box 97
Benton Harbor, Michigan
Ph: 616/926-6171
Fax: 616/925-8288

Product Specifications

PART NUMBER: STD110
REVISION: B

Model Number	Motor Voltage	RPM	HP	kW	Net Wt. lbs.	Net Wt. kg
0532-101-G563B	24V BLDC	2650	1/30	0.02	4.5	2.05
0532-101A-G563B	24V BLDC	2650	1/30	0.02	4.5	2.05

SOUND LEVEL LESS THAN 70 dB(A)
NORMAL AMBIENT 1°C. - 40°C.
RELATIVE HUMIDITY 8% - 100% NON CONDENSING
ENVIRONMENT CLEAN DUST FREE
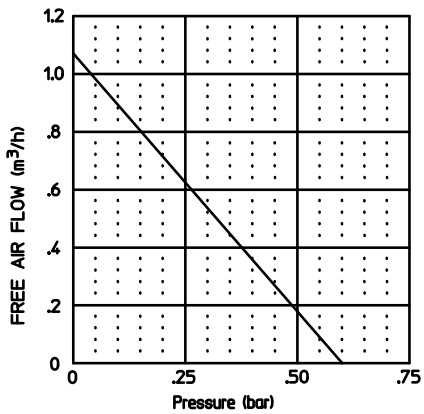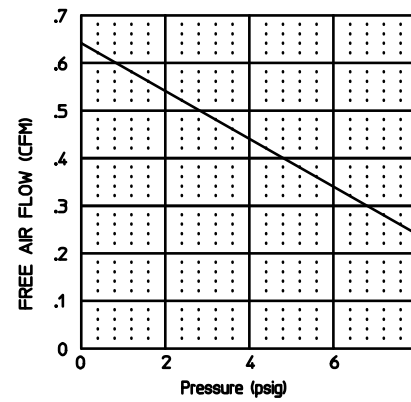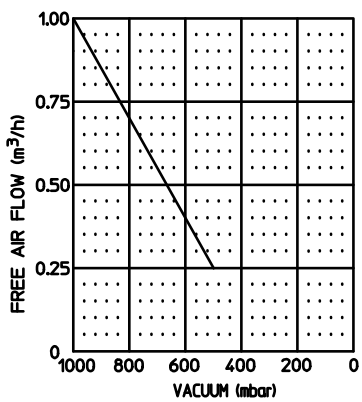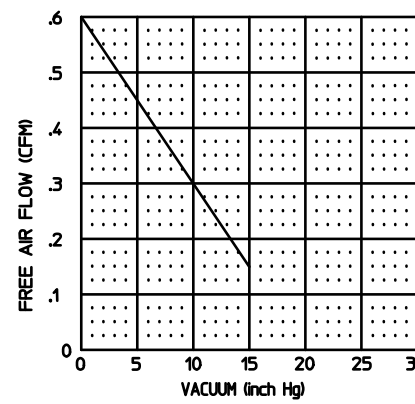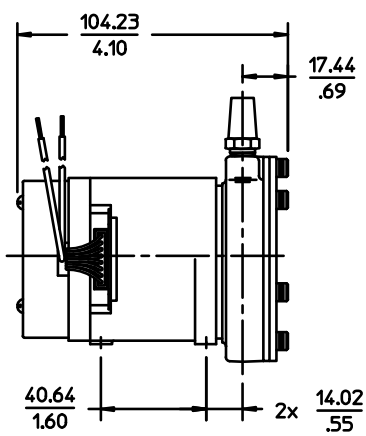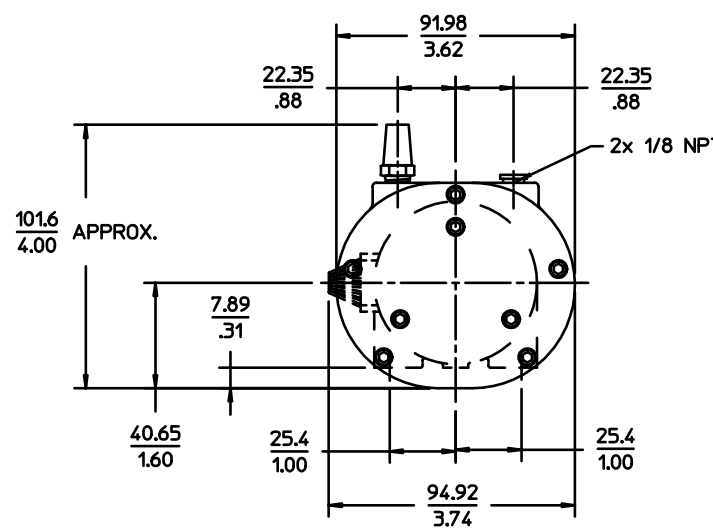
* TECHNICAL DATA SUBJECT TO CHANGE WITHOUT NOTICE.
* DIMENSIONS GIVEN ARE FOR REFERENCE ONLY.