Product Specifications

GAST MANUFACTURING, INC.
A Unit of IDEX Corporation
Post Office Box 97
Benton Harbor, Michigan
Ph: 269/926-6171
Fax: 269/925-8288

Model	V	HP	kW	Hz	Part Number:	Revision
7LDE-46S-M750X	115/208-230	1.5	1.11	60	RTD661A	A

1725 | 75-81 dBA | +5 +40 °C | 20-80 | 73 lbs. 33 kg

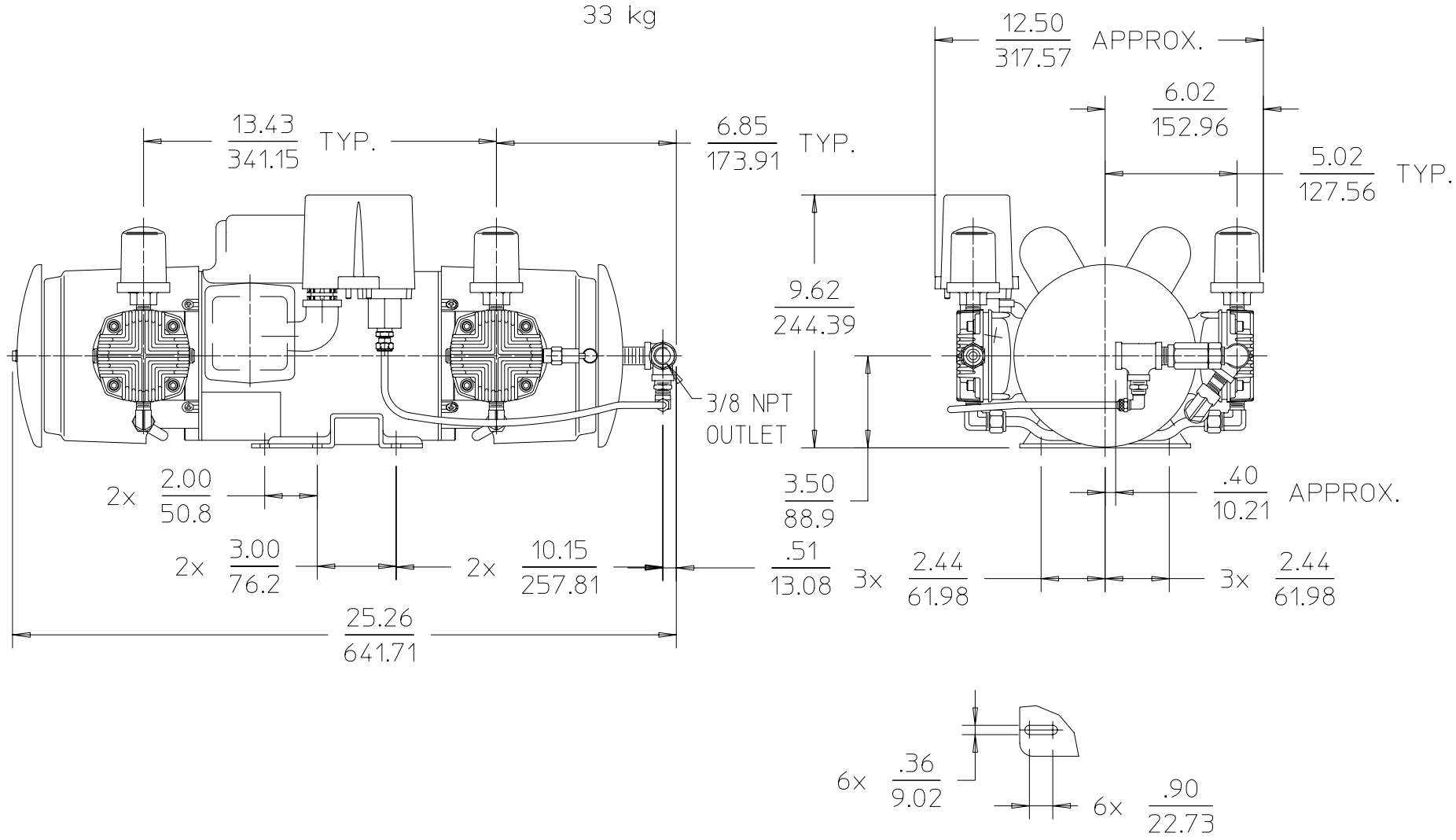

NOTES:
1. ALL DIMENSIONS ARE FOR REFERENCE USE ONLY.
2. PRODUCT DIMENSIONS: U.S. IMPERIAL (inches) METRIC (mm).
3. TECHNICAL DATA SUBJECT TO CHANGE WITHOUT NOTICE.
4 ENVIRONMENT: CLEAN DUST FREE.
5. FACTORY SETTING: CUT-IN 40 PSI± 2 PSI/CUT-OUT 50 PSI ±2 PSI.
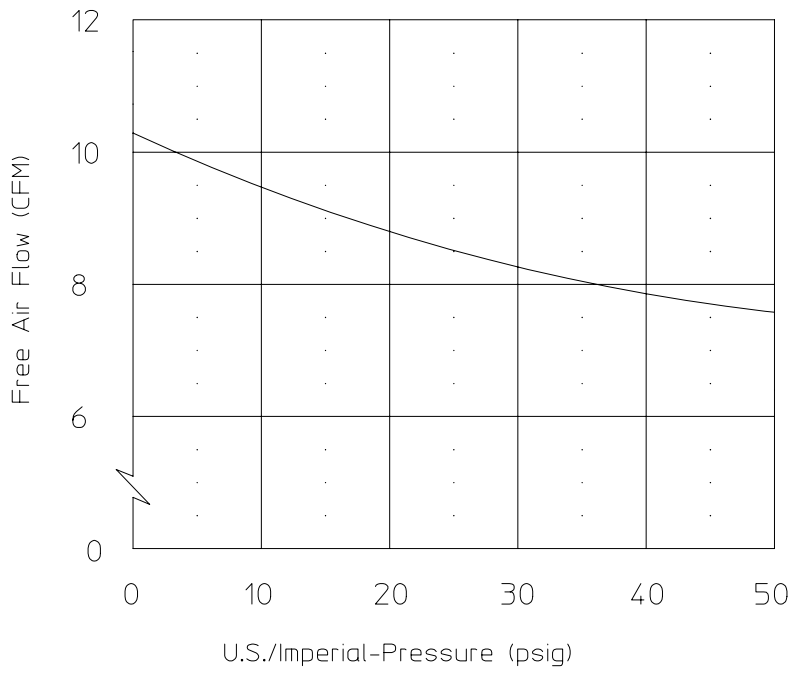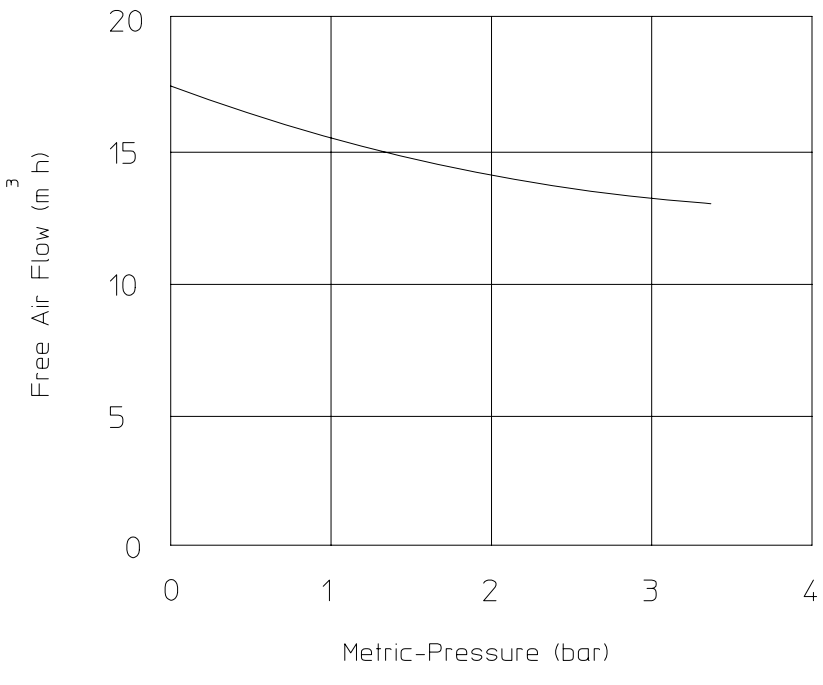
PRODUCT PERFORMANCE