# PRODUCT SPECIFICATION

GAST
A UNIT OF IDEX CORPORATION
BENTON HARBOR, MI U.S.A.

| n/min | | +5 / +40 | % | |
|---|---|---|---|---|
| 3000 60 Hz.<br>2500 50 Hz. | <70 dB(A) | °C | 20% - 80% | 14.56 LBS.<br>6.62 kG. |
| V | HP. | kW | Hz. | A |
| 230/220 | 1/3 | 0.25 | 60/50 | 1.5/1.6 |

PART NUMBER RTD514 REV. A

MODEL NO. DOA-P501-FD
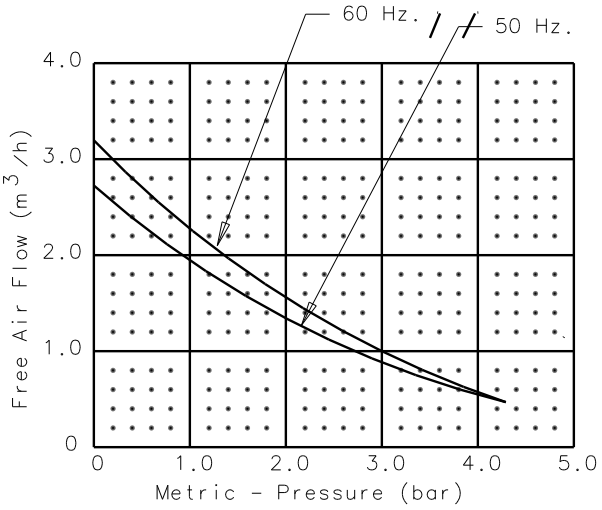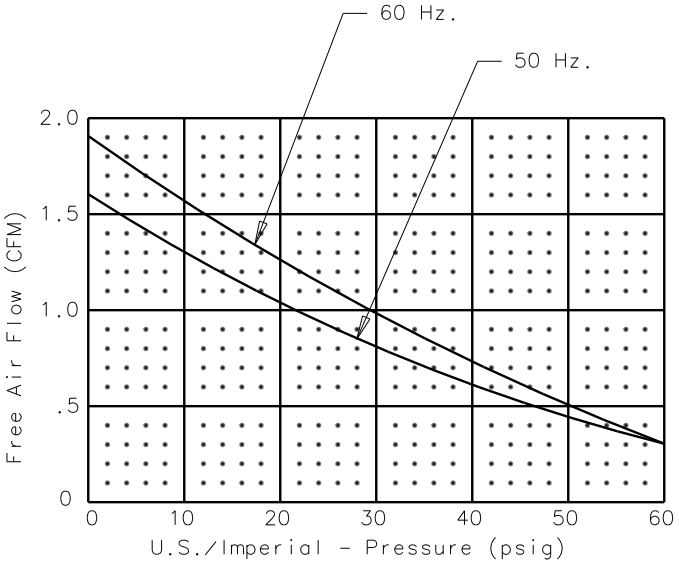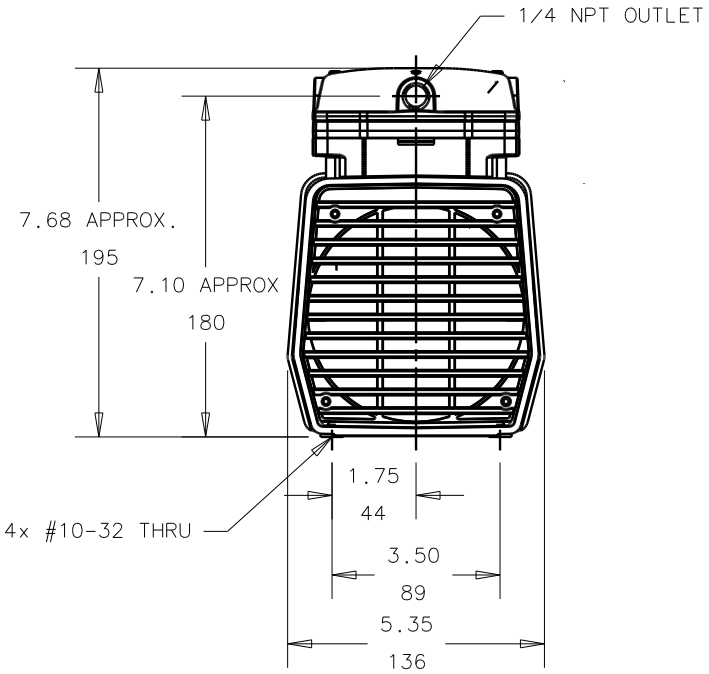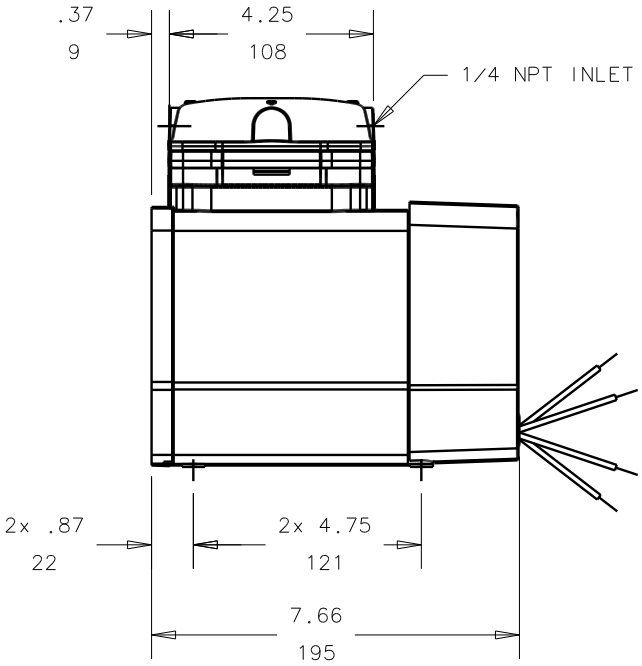
NOTES:
1. ALL DIMENSIONS ARE FOR REF. USE ONLY.
2. PRODUCT DIMENSIONS: U.S. IMPERIAL (inches), METRIC (mm).
3. TECHNICAL DATA SUBJECT TO CHANGE WITHOUT NOTICE.
4. ENVIROMENT: CLEAN DUST FREE.
5. INSTALLATION: THIS PUMP MUST BE INSTALLED IN AN ENCLOSURE.
6. UNIT REQUIRES A 7.5 mfd 370 VOLT CAPACITOR.